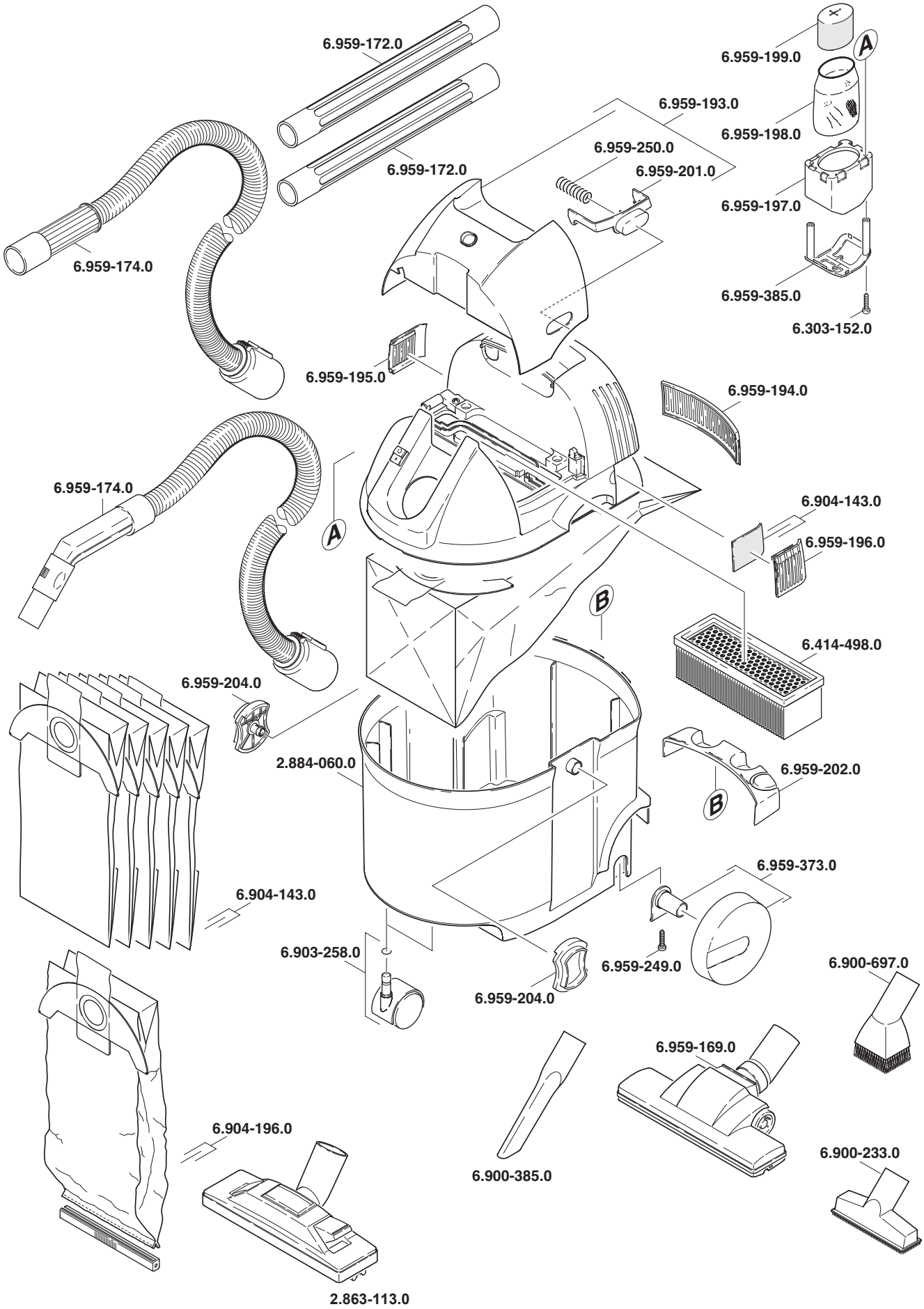KÄRCHER 2501
1.080-131